Robotics and Its Application AI352

Unit 5: Robot Perception

Topics Cover: Sensor and its types, Introduction to computer Vision: image processing, feature extraction, 3D vision, Depth Sensing, stereo vision, Object recognition and tracking Sensor Fusion

By Dr. Aaishwarya Bajaj

Teaching Assistant DoAI, SVNIT,Surat

Sensors

- Human-beings collect information of the surroundings using their sensors, namely eyes, ears, nose, skin etc., in order to perform various tasks.
- A sensor is used to take measurement of physical variable.
- A sensor requires calibration
- Sensors are used to build intelligent robots

Classification of Sensors

1. SENSORS

Internal Sensors
(used to operate the drive units)
Ex. Position sensors, velocity sensors, Acceleration sensors, Force/Moment sensor

External Sensors
(used to collect information of the environment)

Ex. Temperature sensors, Visual sensor, Proximity sensor, Acoustic sensor

Classification of Sensors (Cont.)

SENSORS

2.

Contact Sensors
(Physical contact between sensor mounted on robot and object)

- **Touch sensor/ Tactile sensor/ Binary sensor** (indicates presence or absence of an object) Ex. Micro-switch, Limit switch
- **Force sensor/ Analog sensor** (not only the contact is made but also the force is measured) Ex. Sensors using strain gauges

Non-Contact Sensors
(No physical contact)
Proximity sensor
Visual sensor
Acoustic sensor
Range sensor

Characteristics of Sensors

- **Range :** Difference between the maximum and minimum values of the input that can be measured.
- **Response :** should be capable of responding to the changes in minimum time.
- **Accuracy :** deviation from exact quantity
- **Sensitivity** = change in output/ change in input
- **Linearity :** constant sensitivity
- **Repeatability :** Deviation from reading to reading, when these are taken for a number of times under identical conditions.
- **Resolution**

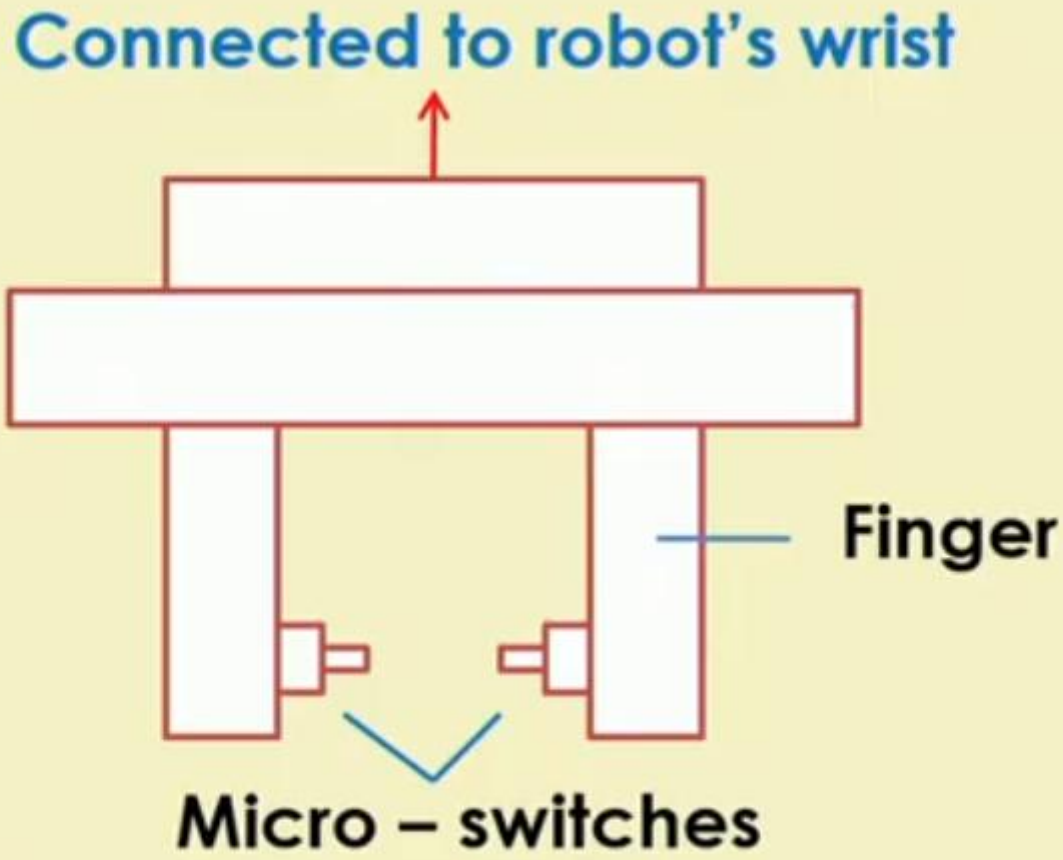

Figure: Micro – switches placed on two fingers of a robotic hand

Position sensor

1. Potentiometer
   - Linear Potentiometer
   - Angular Potentiometer

Angular Potentiometer

Θ: Angular displacement of the wiper with respect to the reference

R: Total resistance

r : Resistance of the coil between the wiper and the reference

V_{in} : Input voltage

V_{out} : Output voltage

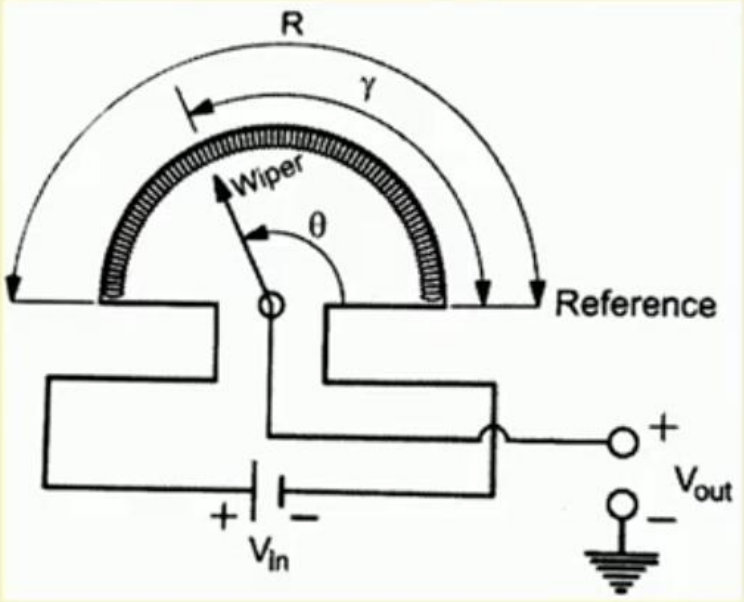

Angular Potentiometer (contd.)

$$\frac{V_{out}}{r} = \frac{V_{in}}{R}$$

$$\Rightarrow V_{out} = \frac{r}{R} V_{in}$$

For the known values of V_{in} ,R; $V_{out} = f(r)$

By measuring V_{out} , r can be determined and hence, angular displacement θ.

Demerit

- Resistance of the wire is temperature dependent. Potentiometer is temperature sensitive.

2. Optical Encoder

- Absolute Optical Encoder
- Incremental Optical Encoder

Absolute Optical Encoder

- It is mounted on the shaft a rotary device
- To generate digital word identifying actual position of the shaft measured from zero position

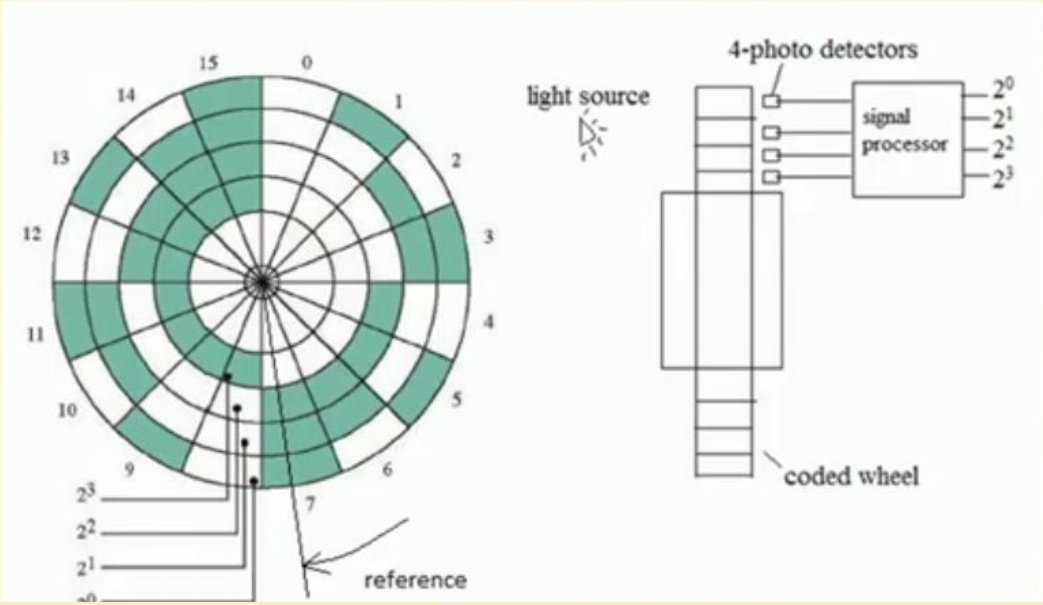

Resolution : 1 part in 2^n, where n : number of concentric rings (tracks)

2^3	2^2	2^1	2^0		DV
0	0	0	0	$\longrightarrow$	0
0	0	0	1	$\longrightarrow$	1
0	0	1	0	$\longrightarrow$	2
	:	:			
	:	:			
1	1	1	0	$\longrightarrow$	14
1	1	1	1	$\longrightarrow$	15

Incremental optical encoder

- Consists of one coded disc and two photo-detectors
- By counting the number of light and dark zones, angular displacement can be measured with respect to known starting position.
- It can determine the direction of rotation also
- It is construction-wise simpler, less accurate and less expensive.

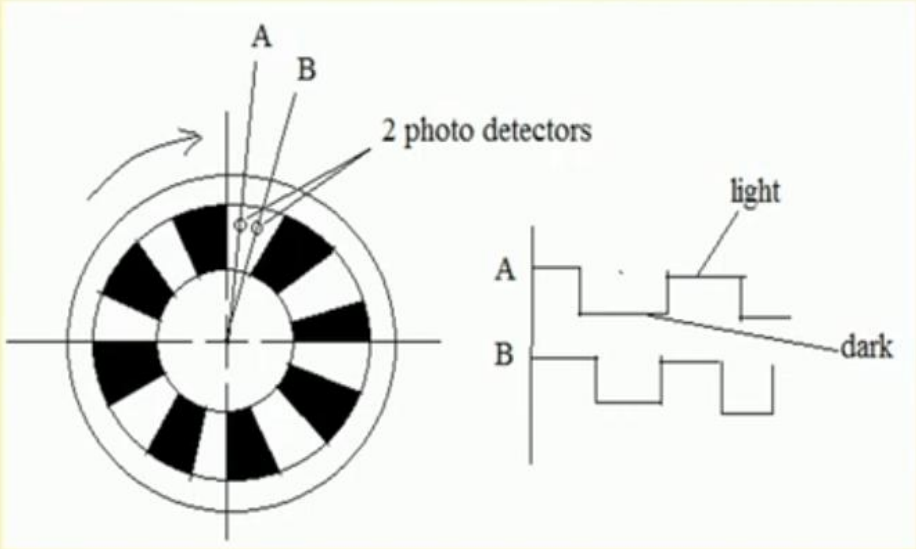

Linear Variable Differential Transformer (LVDT)

- It consists of two parts: fixed casing and moving magnetic core
- In-between the fixed casing and magnetic core, there are one primary(LP) and two secondary (L_{s1}, Ls_2) coils
- Produced voltage output is proportional to the displacement of moving part relative to the fixed one

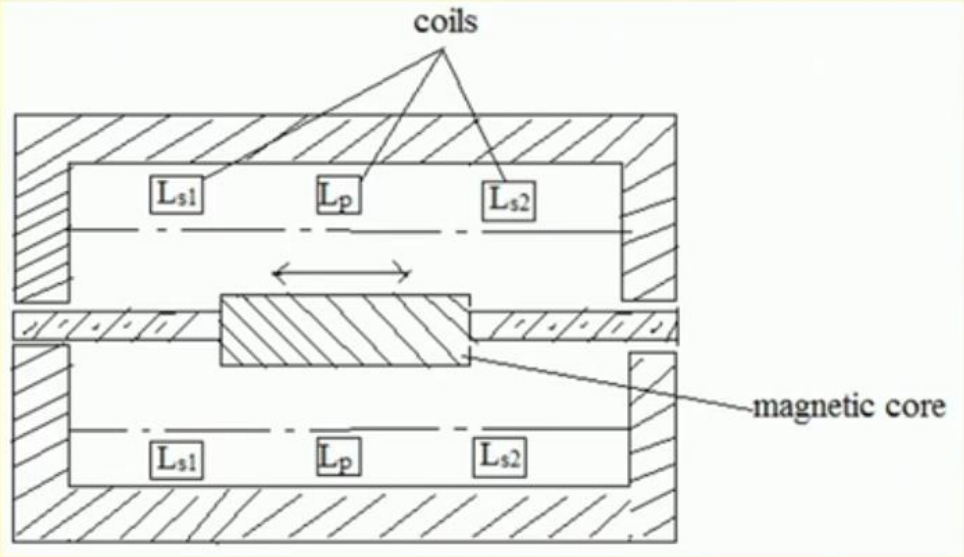

LVDT (contd.)

- AC voltage is applied to L_p
- L_{s1} and L_{s2} are connected in series. $V_{out} = V_{L_{s2}} - V_{L_{s1}}$

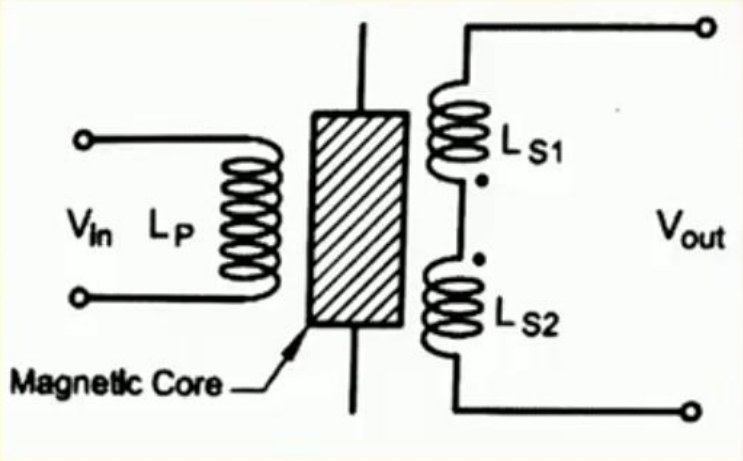

LVDT: equivalent electrical circuit

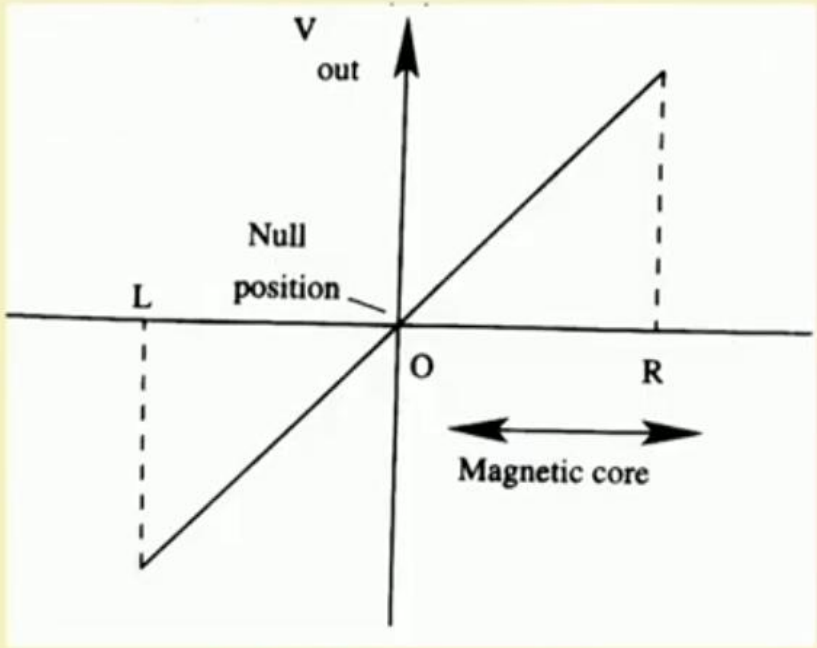

Calibration curve

Force/Moment sensor

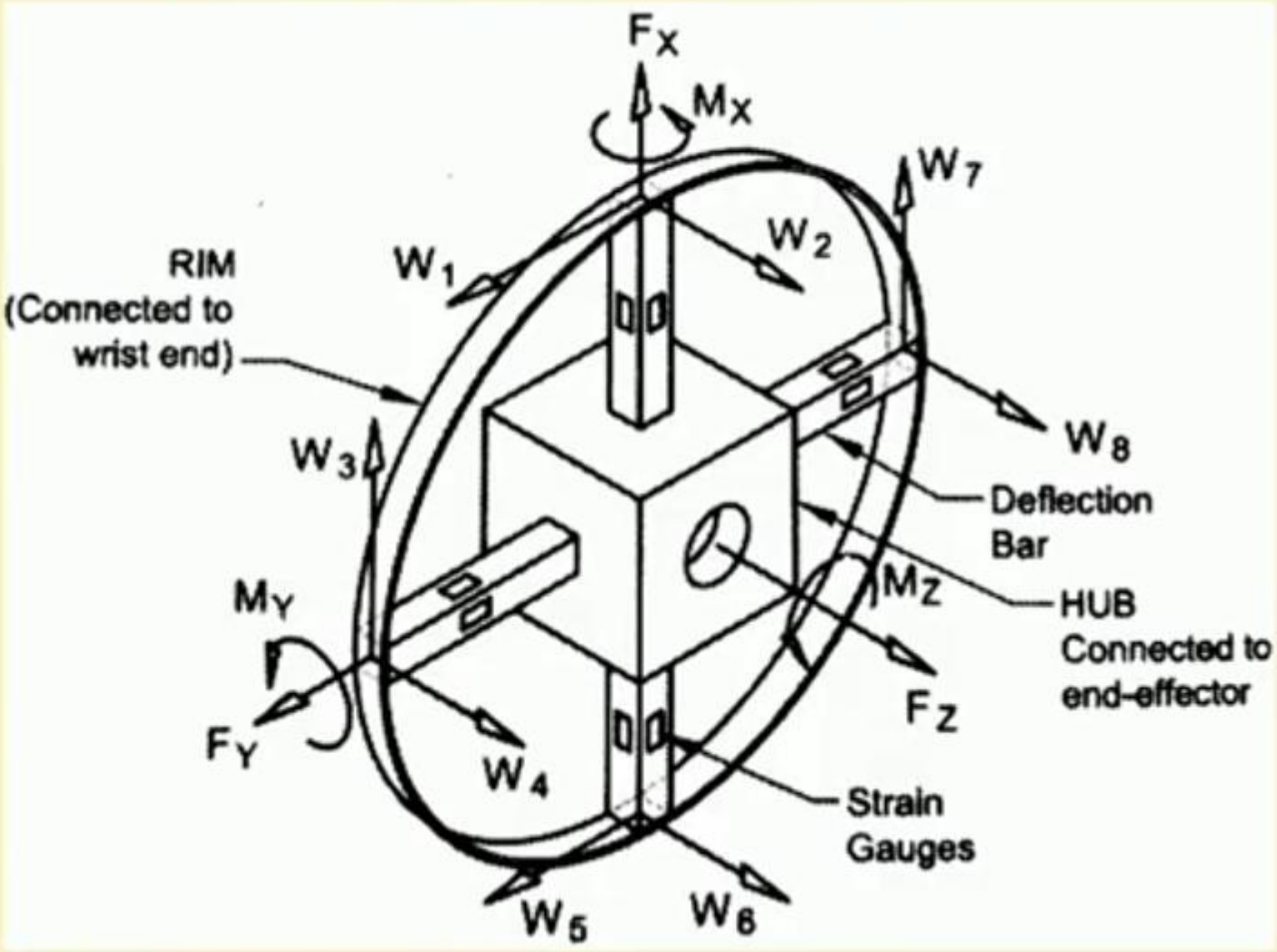

Force/Moment sensor (contd.)

- It is placed between the wrist and end-effector end
- It consists of 4 deflection bars. Two pairs of strain gauges are mounted on each deflection bar. One end of each deflection bar is rigidly supported by a hub, which is connected to the end-effector end. The other ends of the deflection bars are supported by a common rim, which is connected to the wrist end.
- External forces cause deflection of the mechanical structure, which are measured using strain gauges.

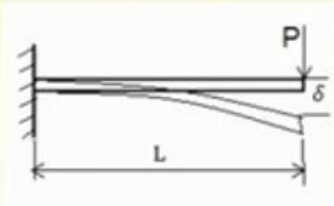

$$\delta = \frac{PL^3}{3EI}$$

Force/Moment sensor (contd.)

- Strain gauge is connected to potentiometer circuit, whose output voltage is proportional to the deflection and hence, force.
- Three components of force (F) and moment (M) each are determined by adding and subtracting the respective components of force. $\mathbf{F} = \mathbf{C_M}\,\mathbf{W}$

Calibration matrix

Forces/ moments

$$\begin{bmatrix} F_x \\ F_y \\ F_z \\ M_x \\ M_y \\ M_z \end{bmatrix} = \begin{bmatrix} C_{11} C_{12} C_{13} --- C_{18} \\ C_{21} C_{22} C_{23} --- C_{28} \\ \cdot \\ \cdot \\ \cdot \\ C_{61} C_{62} C_{63} --- C_{68} \end{bmatrix} \begin{bmatrix} W_1 \\ W_2 \\ \cdot \\ \cdot \\ \cdot \\ W_8 \end{bmatrix}$$

Readings of the strain gauges

$$F_X = W_3C_{13} + W_7C_{17}$$

$$F_Y = W_1C_{21} + W_5C_{25}$$

$$F_Z = W_2C_{32} + W_4C_{34} + W_6C_{36} + W_8C_{38}$$

$$M_X = W_4C_{44} + W_8C_{48}$$

$$M_Y = W_2C_{52} + W_6C_{56}$$

$$M_Z = W_1C_{61} + W_3C_{63} + W_5C_{65} + W_7C_{67}$$

Precautions

- **Strain gauges are to be properly mounted on the deflection bars**
- **Sensor should be operated within the elastic limit of its material (deflection bars).**

Range Sensor

- It measures the distance between the sensor (detector) mounted on the robot's body and the object

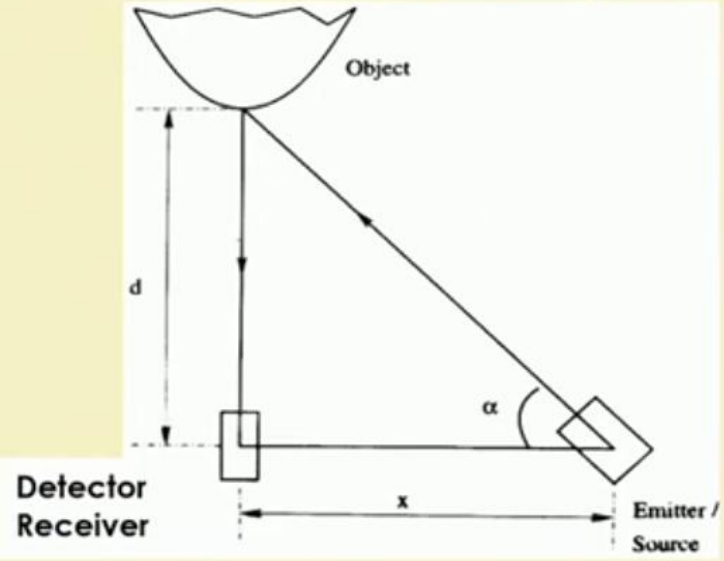

Triangulation method

$$\frac{d}{a} = \tan\theta$$

$$d = a\tan\theta$$

Knowing the values of a and θ, d can be calculated.

Proximity Sensors

- Inductive Sensor
- Hall-effect Sensor
- Capacitive Sensor

Inductive Sensor

- It consists of a permanent magnet and a wound coil placed next to it.

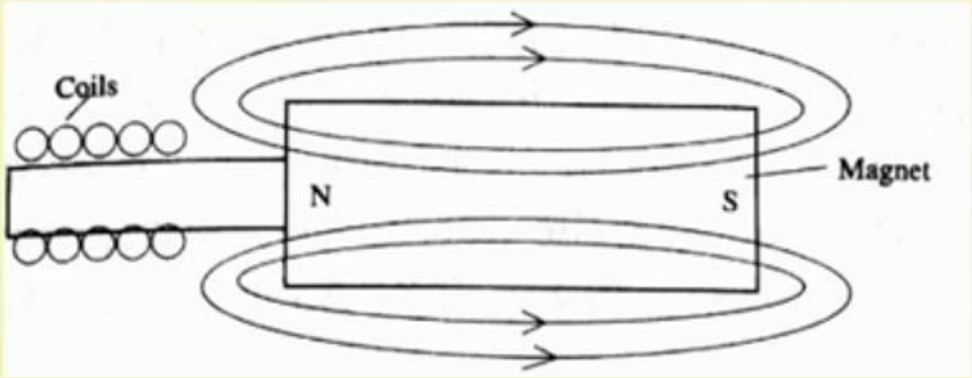

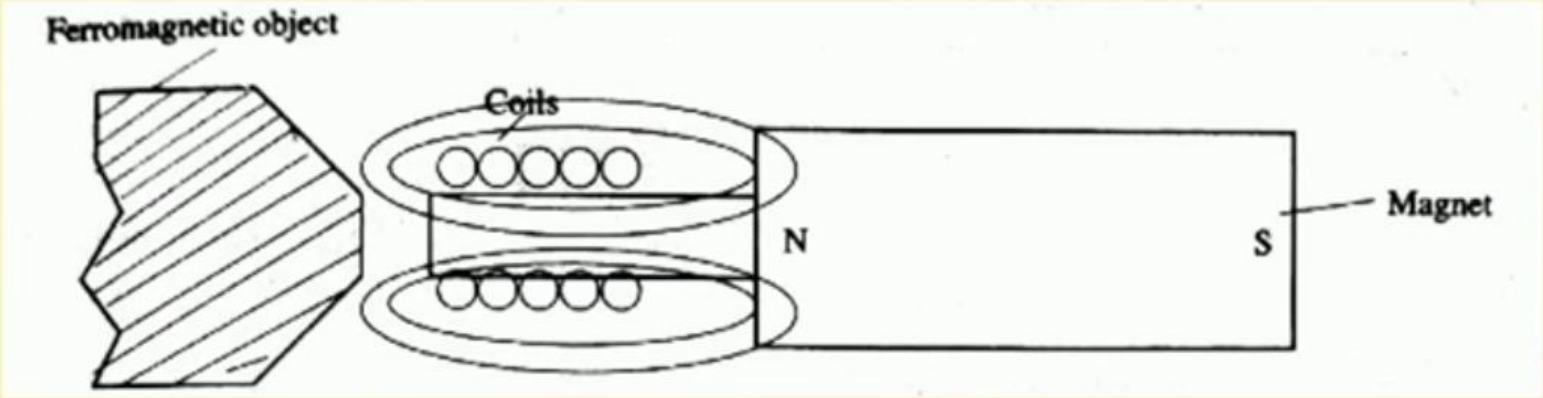

- The nature of flux lines changes, as the sensor comes closer to a ferromagnetic object.
- The flux lines change, as the ferromagnetic object either enters or leaves the field of the magnet.
- Rate of change of the magnetic flux is proportional to induced current (voltage)

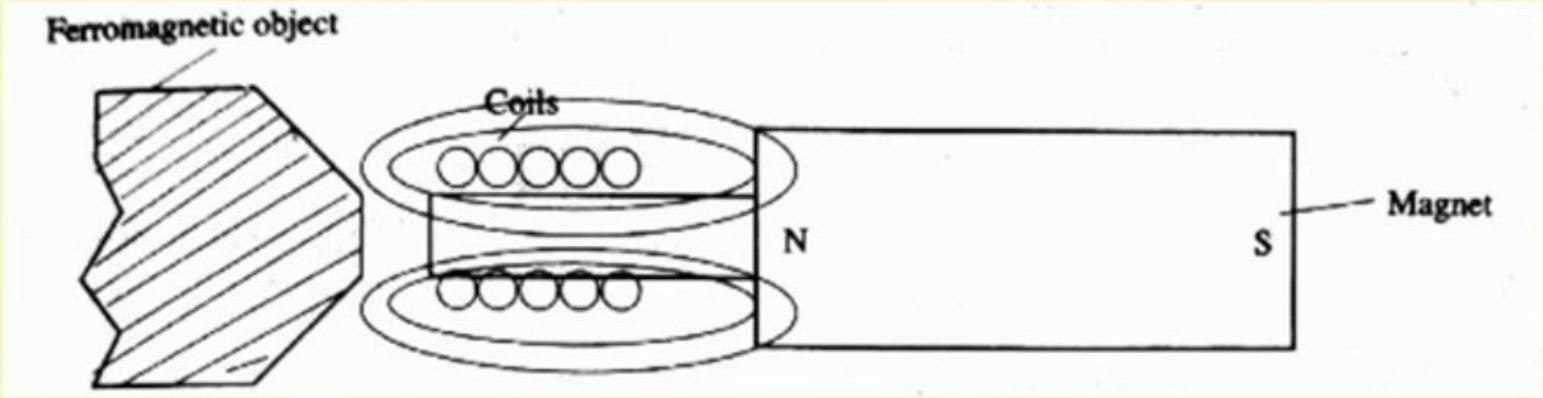

- The nature of flux lines changes, as the sensor comes closer to a ferromagnetic object.
- The flux lines change, as the ferromagnetic object either enters or leaves the field of the magnet.
- Rate of change of the magnetic flux is proportional to induced current (voltage)

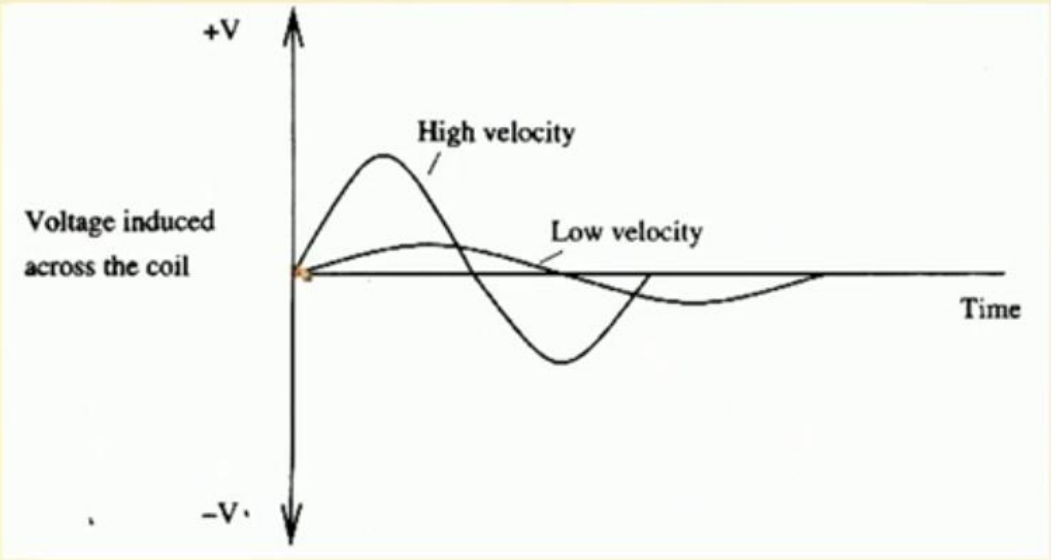

Inductive sensor:
induced voltage vs. time

- Voltage induced across the coil depends on the speed at which the object either enters or leaves the magnetic field
- Polarity of the voltage depends on whether the object enters or leaves the field.

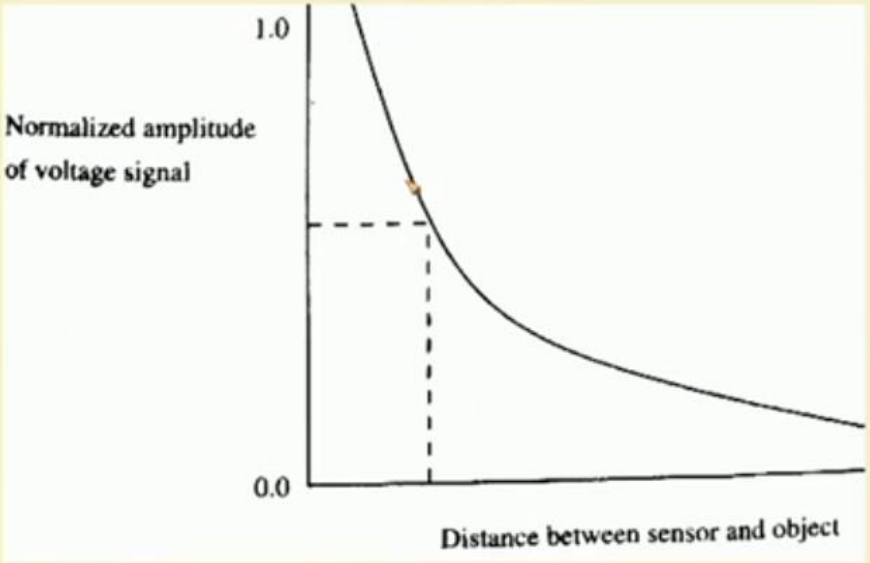

Calibration curve

- The figure shows the calibration curve corresponding to the measured amplitude of voltage signal, the distance between the sensor and object can be determined.

Hall-Effect Sensors (for Ferro-magnetic object)

- It works based on the principle of Lorentz force
- If a charge of amount q is moving with velocity $\vec{v}$ in a magnetic field of strength $\vec{B}$, then the Lorentz force

$$\vec{F} = q(\vec{v} \times \vec{B})$$

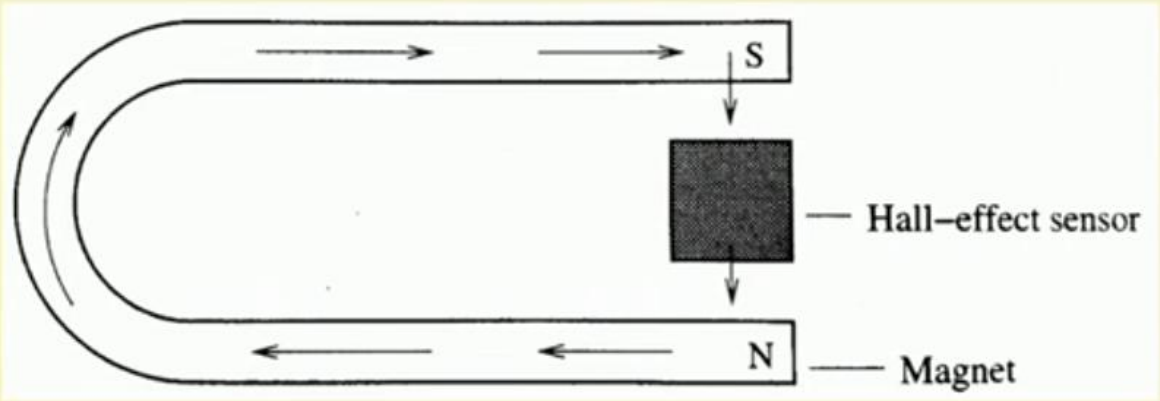

Hall-Effect Sensors (cont.)

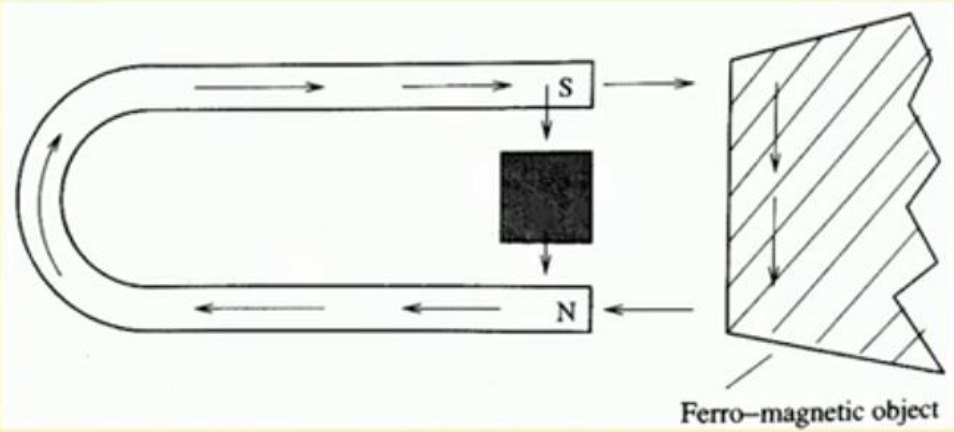

- Voltage across the semiconductor will be reduced

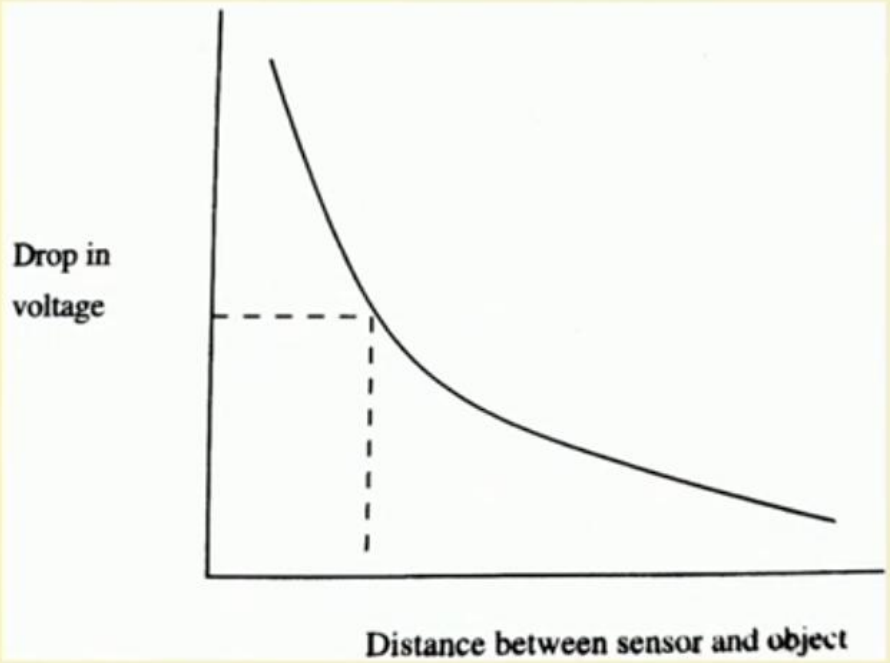

Calibration curve for Hall-effect sensor

Capacitive Sensor (suitable for any material)

- When an object is brought near to the sensitive electrode, there will be accumulation of charge and consequently, its capacitance changes.
- When the capacitance of the sensor exceeds a predefined threshold value, oscillation starts.
- Oscillations are converted into output voltage through PCB.

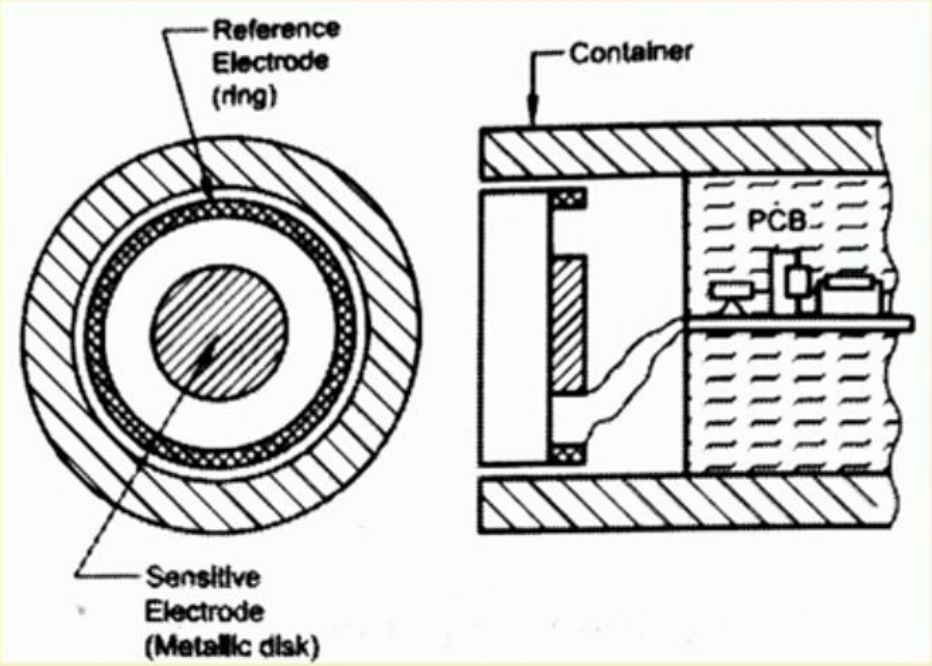

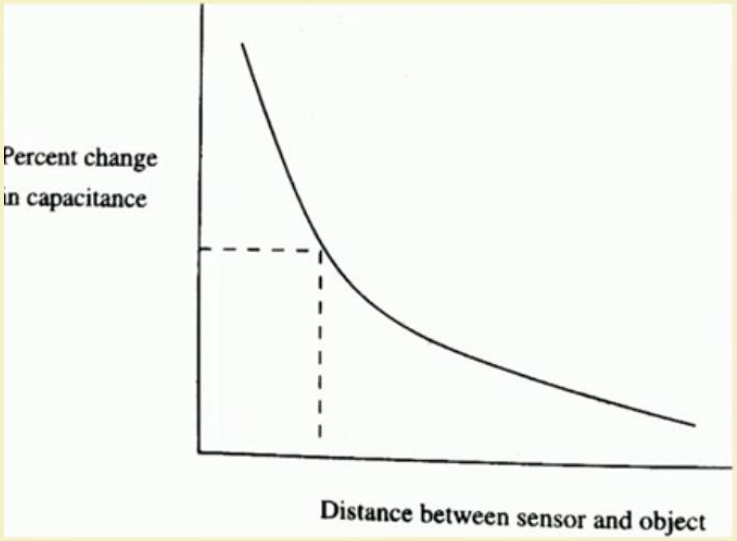

Calibration Curve

Computer Vision and Robot Vision

- Computer vision enables machines to analyze and interpret visual data (images/video) using AI, while robot vision specifically integrates this technology with cameras and algorithms to guide robotic actions, such as navigation, object recognition, and manipulation.
- While computer vision is a broad field of study, robot vision is a subset applied to physical robots to interact with their surroundings. Robot Vision: To extract, characterize and interpret objects present in an image/photograph captured using a camera.

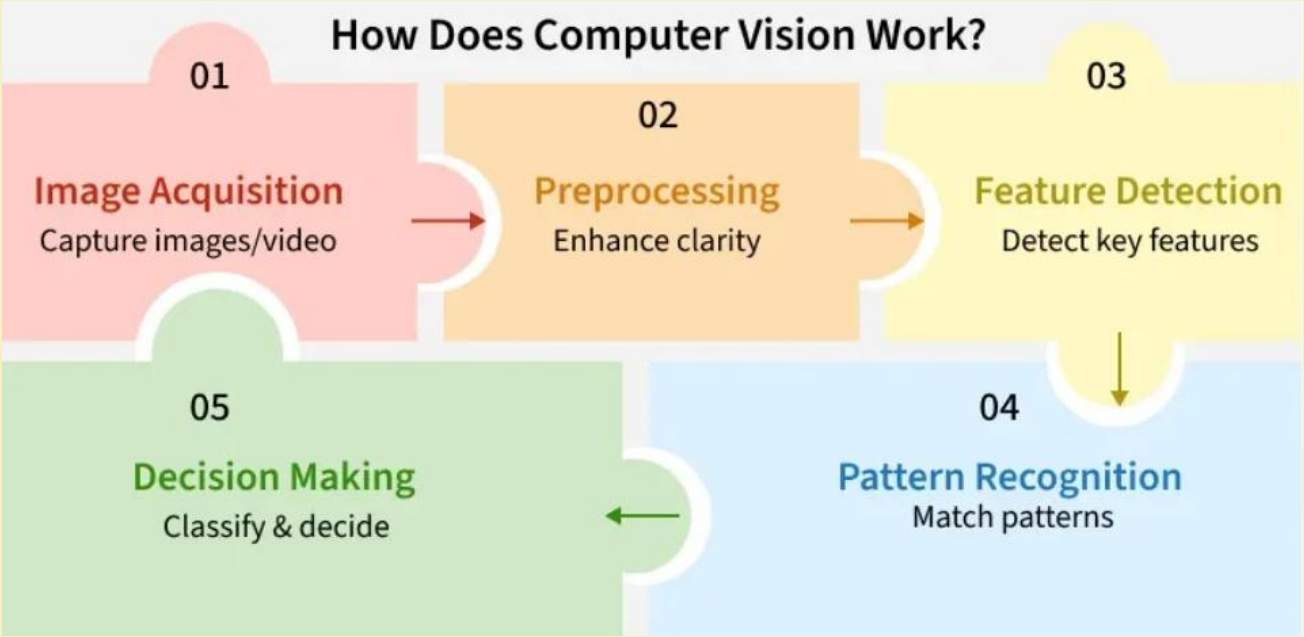

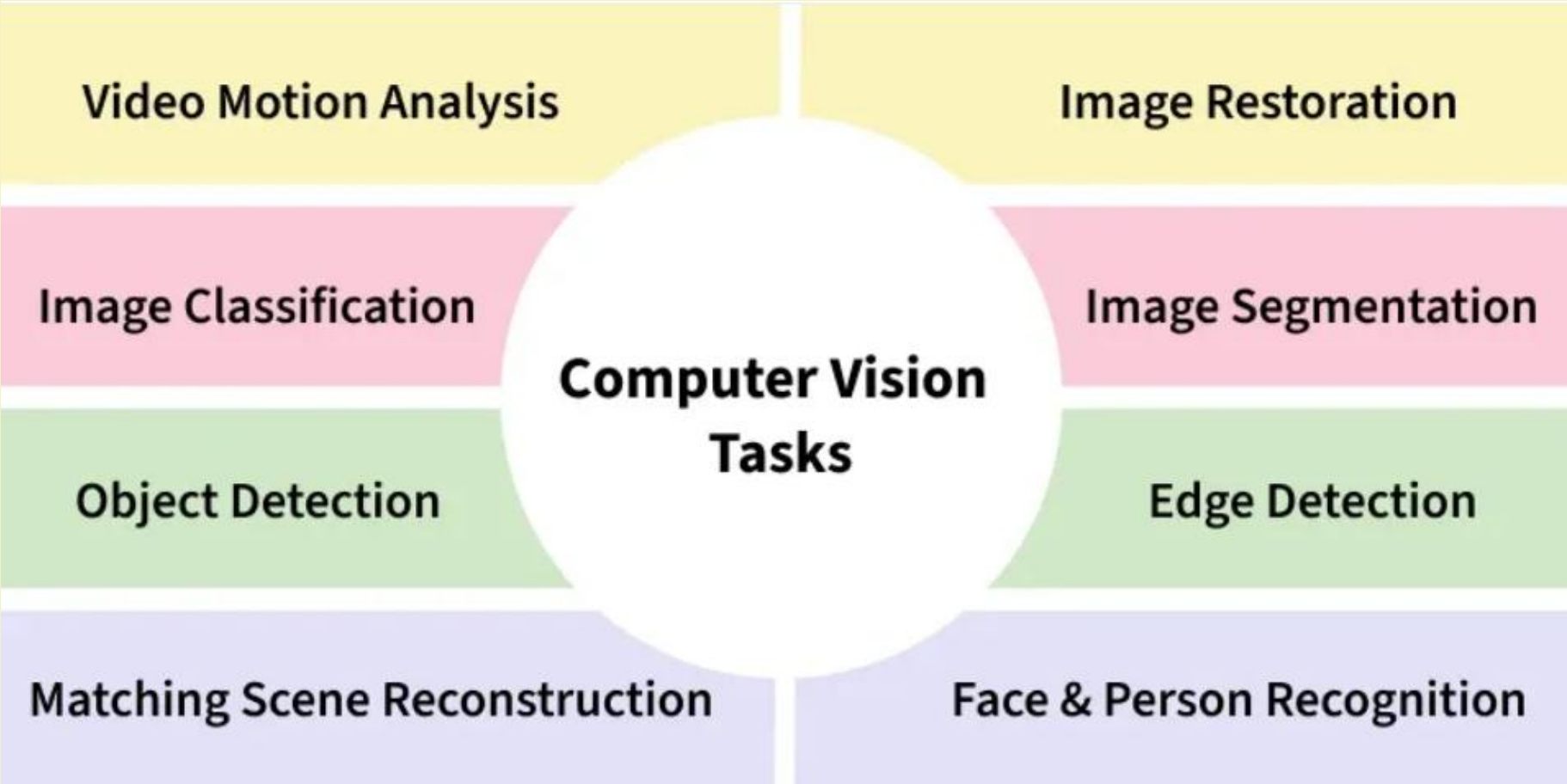
Video Motion Analysis
Image Restoration
Image Classification
Image Segmentation
Computer Vision Tasks
Object Detection
Edge Detection
Matching Scene Reconstruction
Face & Person Recognition

Image Processing

Steps to be Followed

- *Step 1*: Capturing image of the environment using CCD camera.

- *Step 2*: Light intensity is measured along a particular direction say Y using Electron Beam Scanner (in which the charge accumulated in photo-sites is proportional to light intensity). Analog plot of light intensity is digitized and it is known as A/D conversion or digitizing.

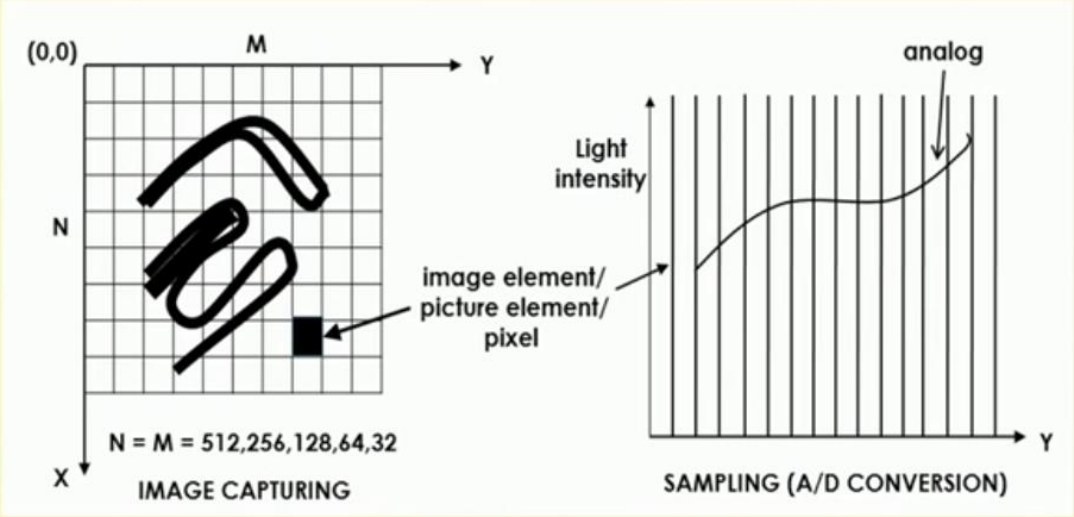

Steps to be Followed (contd.)

- *Step 3*: Image is stored as an array of pixels (each pixel may have different light intensity values). It is known as frame grabing.

- *Step 4*: Preprocessing of the data collected in *Step 3* is done for noise reduction, restoration of lost information etc.

Frame Grabbing

$$\begin{bmatrix} f(0,0) & f(0,1) & \text{----------} & f(0,M-1) \\ f(1,0) & f(1,1) & \text{----------} & f(1,M-1) \\ \vdots & \vdots & & \vdots \\ f(N-1,0) & f(N-1,1) & \text{----------} & f(N-1,M-1) \end{bmatrix}$$

f(x,y) : Light intensity of image at the point (x,y)

Methods of Pre-Processing

a. Masking

$$P(x,y) = O[f(x,y)]$$

Pre-processed intensity

operator

Input intensity

f(x,y) : Light intensity value at pixel Q

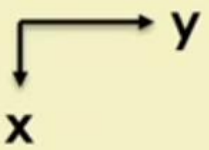

f(x-1,y-1)	f(x-1,y)	f(x-1,y+1)
f(x,y-1)	Q: f(x,y)	f(x,y+1)
f(x+1,y-1)	f(x+1,y)	f(x+1,y+1)

Let us consider the pixel Q having the coordinates (x,y). It has two horizontal and two vertical and four diagonal neighbors.

Let us consider a 3x3 mask with coefficients W_1, W_2, W_3, W_4, W_5, W_6, W_7, W_8, and W_9.

W_1	W_2	W_3
W_4	W_5	W_6
W_7	W_8	W_9

-1	-1	-1
-1	+8	-1
-1	-1	-1

Example of a 3x3 mask

$$
\begin{aligned}
P(x,y) = O[f(x,y)] \\
&= W_1 f(x-1,y-1) + W_2 f(x-1,y) + W_3 f(x-1,y+1) \\
&+ W_4 f(x,y-1) + W_5 f(x,y) + W_6 f(x,y+1) + W_7 f(x+1,y-1) \\
&+ W_8 f(x+1,y) + W_9 f(x+1,y+1)
\end{aligned}
$$

b. Neighborhood Averaging

Here, p(x,y) is calculated by averaging the intensity values of the pixels contained in a pre-defined neighborhood of f(x,y).

$$p(x,y) = \frac{1}{R} \sum_{(n,m) \in S} f(n,m)$$

Where, S is the set of pixels lying in the neighbourhood of (x,y) including itself and R is the total number of neighbourhood pixels including itself.

c. Median Filtering

To determine pre-processed light intensity value of a pixel Q, we consider light intensity values of all its neighboring pixels including itself. We sort light intensity values in the ascending order say, and then determine the median value. This median value is going to replace the intensity value at Q.

Step 5: Thresholding

- To get clear distinction between objects and the background, let T be the threshold intensity

$$g(x,y) = \begin{cases} 1, & if\ p(x,y) > T \\ 0, & if\ p(x,y) \le T \end{cases}$$

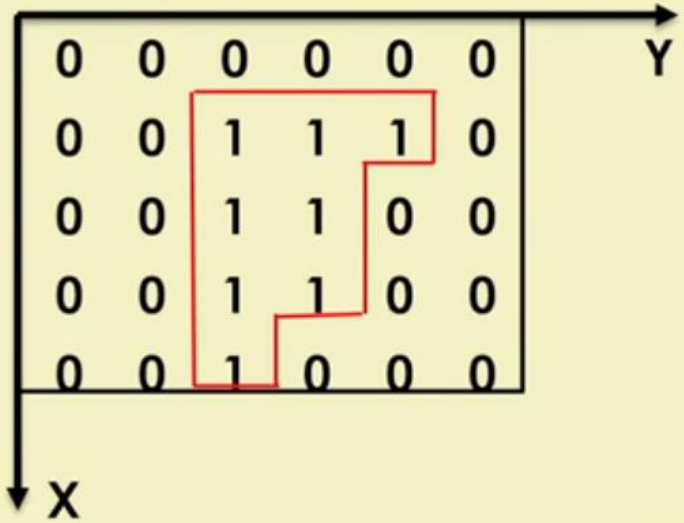

For the black background and white object, 1 corresponds to object and 0 indicates the background.

Step 6: Edge detection

- To detect the edge of an object
- Gradient operator

$$G[p(x,y)] = \begin{bmatrix} G_x \\ G_y \end{bmatrix} = \begin{bmatrix} \partial p / \partial x \\ \partial p / \partial y \end{bmatrix}$$

Masks used for Gradient operator

-1	-2	-1
0	0	0
1	2	1

G_x

-1	0	1
-2	0	2
-1	0	1

G_y

- Laplace operator

$$L[p(x,y)] = \frac{\partial^2 p}{\partial x^2} + \frac{\partial^2 p}{\partial y^2}$$

0	1	0
1	-4	1
0	1	0

Edge Detection (contd.)

- **Light object on dark background**

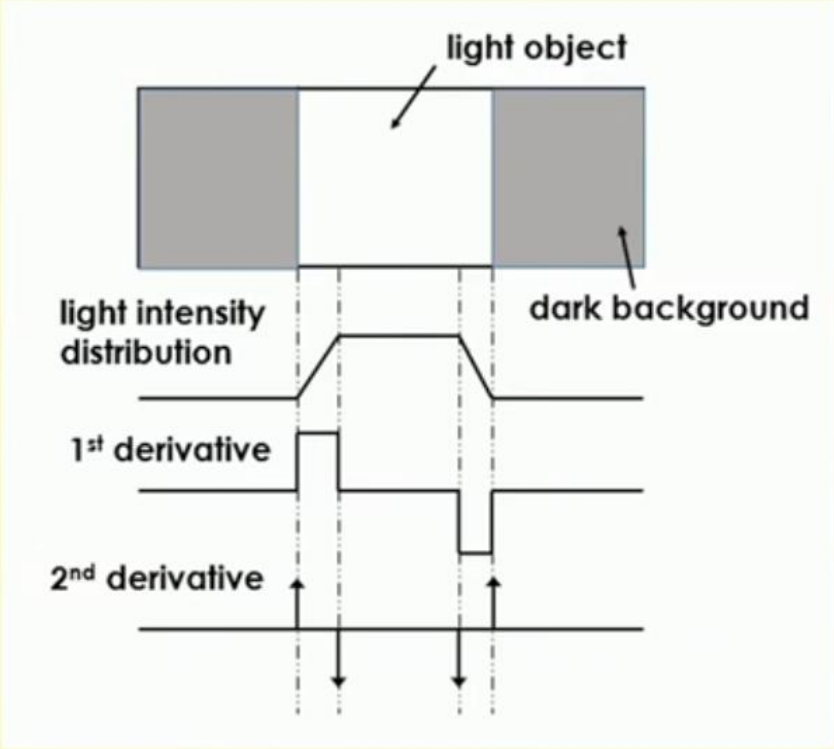

Boundary Descriptors

Chain Codes – used to represent the boundary of an object by a set of straight line segments of specified length and direction.

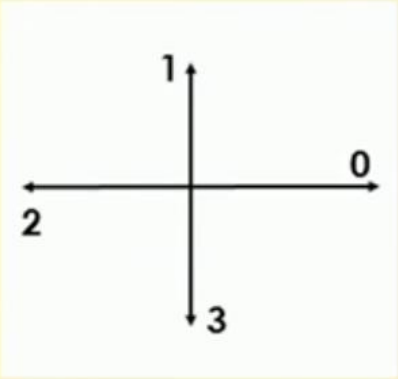

4-directional chain code

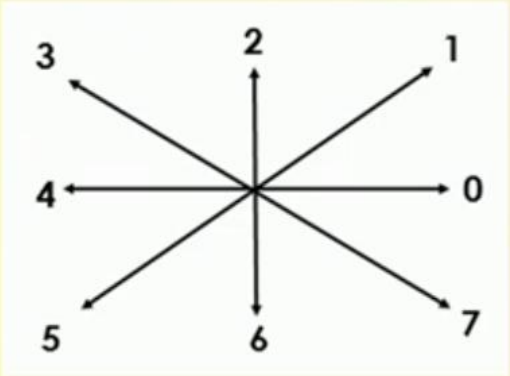

8-directional chain code

Example:

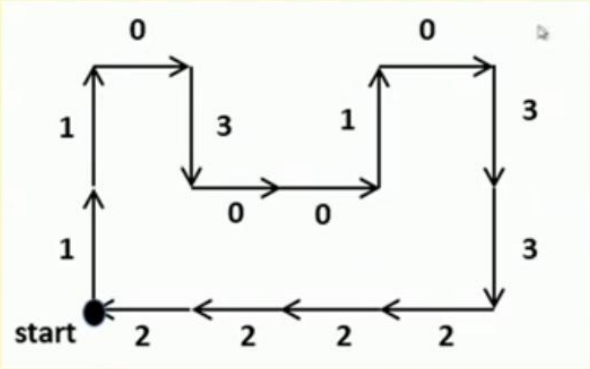

Chain code: 11030010332222

Signature

- One dimensional functional representation of a boundary

Examples:

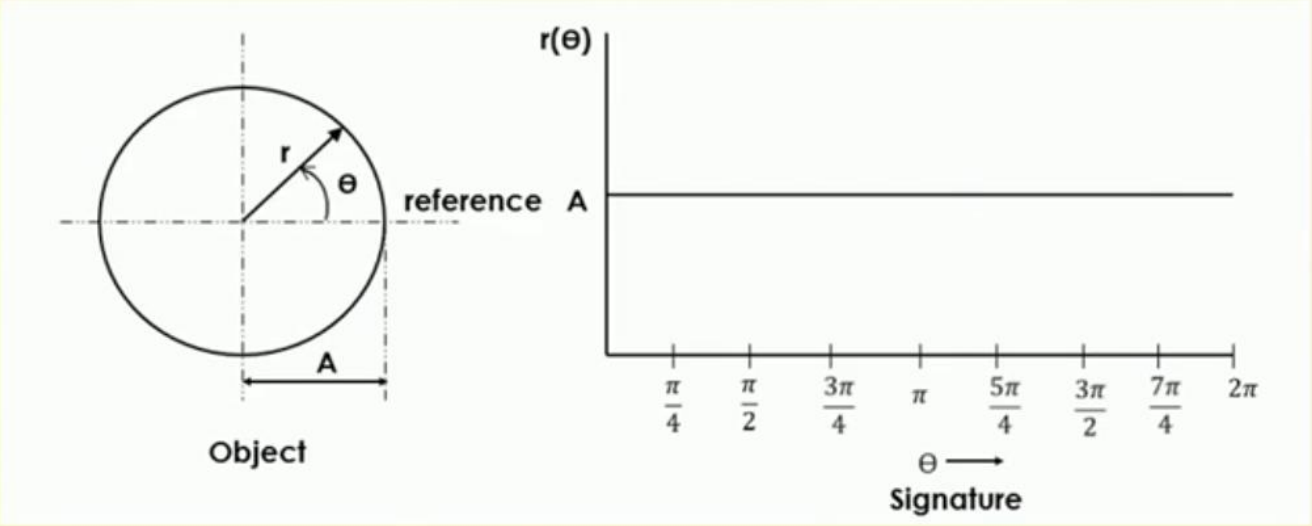

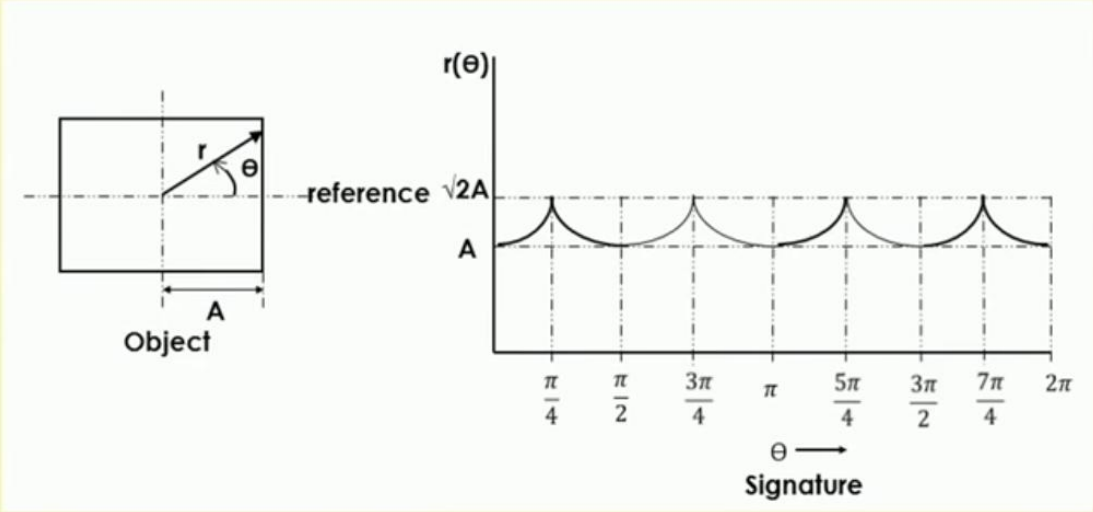

Note: To identify multiple objects present in an image, we consider *Compactness = (perimeter^2/ area)*

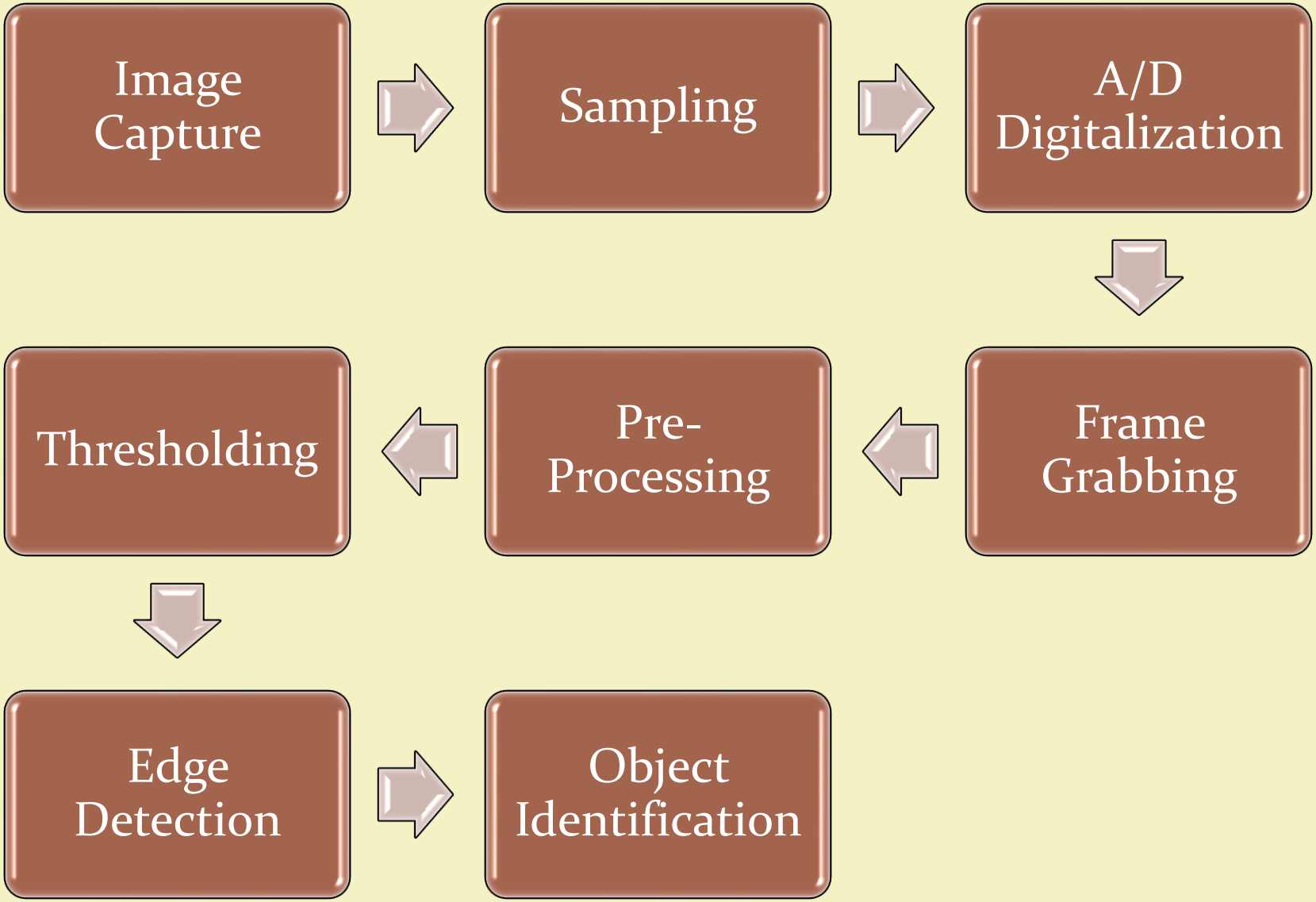
Image Capture
Sampling
A/D Digitalization
Frame Grabbing
Pre-Processing
Thresholding
Edge Detection
Object Identification

Stereo Vision and Depth Estimation

- Stereovision (or stereo vision) is a technique in computer vision that uses two or more cameras placed at different viewpoints to simulate human binocular vision.
- It allows the perception of depth by identifying corresponding points in the images taken from each camera.
- The key idea is to estimate the disparity between two images to calculate depth. It is widely used in robotics, autonomous vehicles and 3D reconstruction.

Key Features of Stereovision

- ❖ Passive depth sensing: Unlike LiDAR, it doesn't emit signals but uses ambient light.
- ❖ Real-time capability with optimized algorithms.
- ❖ Low cost compared to active depth sensors.
- ❖ Dense depth maps can be created from rectified images.
- ❖ Non-intrusive and suitable for indoor/outdoor environments.
- ❖ Scalable for multi-view stereo setups.
- ❖ Accurate spatial mapping for close and medium-range scenes.
- ❖ Can be integrated with other vision techniques.

Components of a Stereo Vision System

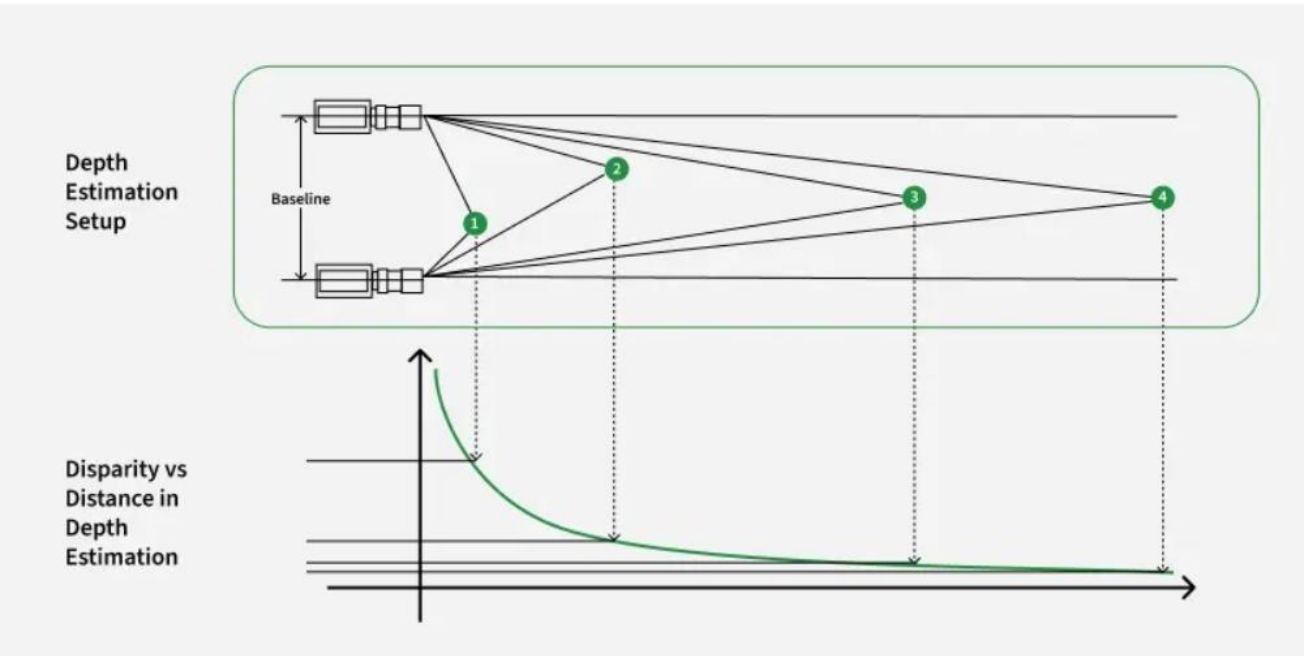

Depth Estimation Setup and Disparity vs Distance Mapping

- **Stereo Camera Setup** : Two cameras with a known and fixed baseline.
- **Camera Calibration** : Intrinsic and extrinsic parameter estimation for accurate geometry.
- **Image Rectification** : Aligns image planes so epipolar lines are horizontal.
- **Feature Detection / Stereo Matching** : Detects or matches corresponding points (using methods like SGM or block matching).
- **Disparity Estimation** : Measures pixel shifts (disparity) between the two images.
- **Depth Computation** : Calculates depth using triangulation.
- **Depth Map Generation** : Produces a pixel-wise 2D array representing distances.
- **3D Reconstruction (Optional)** : Converts disparity and camera parameters into 3D coordinates or point clouds.

Mathematical Representation

To calculate disparity and depth:

Let,

f = focal length (in pixels)

B = baseline (distance between cameras)

d = disparity (difference in x-coordinates between matching pixels)

Depth (Z) is calculated as: $\frac{f \times B}{d}$

Disparity: $x_{left} - x_{right}$

This formula assumes the images are rectified and the epipolar lines are horizontal.

Working of Stereo Vision

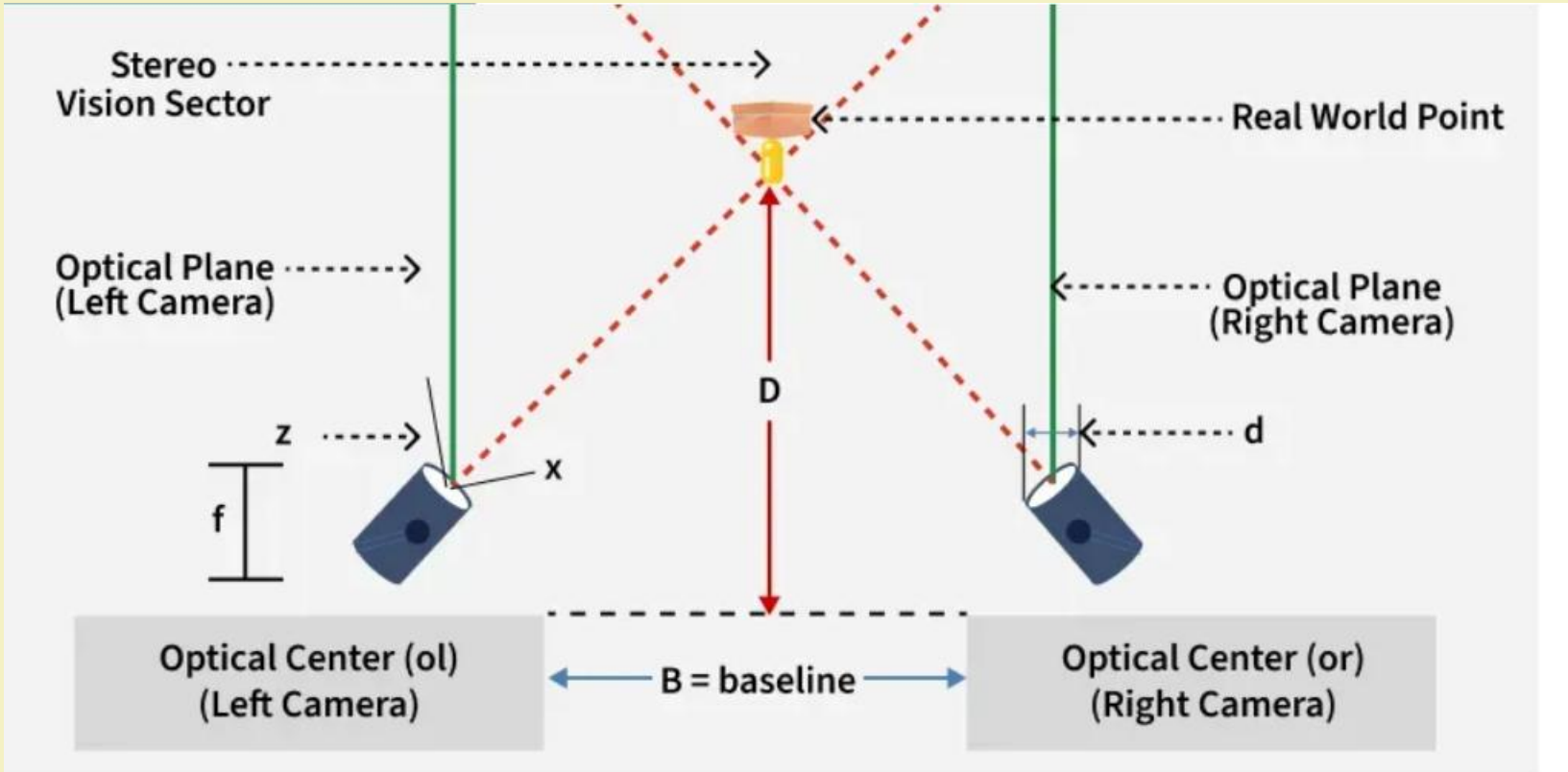

Workflow and Setup of Depth Estimation using Stereo Vision

Stereovision assumes that both cameras are calibrated and aligned. A rectified stereo image pair enables easier disparity computation by aligning corresponding epipolar lines horizontally. By analyzing the slight differences (parallax) between the two images, the system can triangulate depth. It mimics the natural depth perception mechanism in human vision.

1. **Capture Images:** Use two synchronized cameras with a fixed baseline to capture left and right images of a scene.
2. **Camera Calibration:** Estimate intrinsic parameters (focal length, principal point) and extrinsic parameters (rotation and translation between cameras).
3. **Image Rectification:** Warp both images so that epipolar lines are aligned horizontally. This simplifies correspondence search to one dimension (along scanlines).
4. **Stereo Matching / Disparity Estimation:** Find corresponding pixels in both images using Block Matching, Semi-Global Matching (SGM), Graph Cuts and Deep Learning.
5. **Disparity Map Construction:** Generate a disparity image where each pixel stores the disparity value (in pixels).
6. **Depth Estimation (Triangulation):** Compute depth using the formula: $Z = \frac{f \times B}{d}$
7. **Depth Map and Visualization:** Generate a 2D depth map or point cloud to represent 3D structure.

Techniques Used in Stereovision

1. Block Matching
2. Semi-Global Matching
3. Graph Cut Optimization
4. Dynamic Programming
5. Local and Global Stereo Matching Algorithms

Advantages of Stereovision

- ❖ No need for active sensors.
- ❖ Relatively low-cost with commercial stereo cameras.
- ❖ Useful in both indoor and outdoor environments.
- ❖ Good depth resolution for nearby objects.
- ❖ Can be used in real-time systems.

Applications of Stereovision

- ✓ Autonomous Vehicles for obstacle detection and navigation.
- ✓ Robotics for grasping and interaction with environments.
- ✓ Medical Imaging.
- ✓ Industrial Inspection

Simultaneous localization and mapping (SLAM)

- Simultaneous localization and mapping (SLAM) is a technique that combines mapping and localization. It aims to create a map of an unknown environment while simultaneously estimating the camera or sensor's position within that environment. SLAM is essential in robotics and autonomous vehicle applications, where real-time mapping and localization are crucial for navigation and scene understanding.

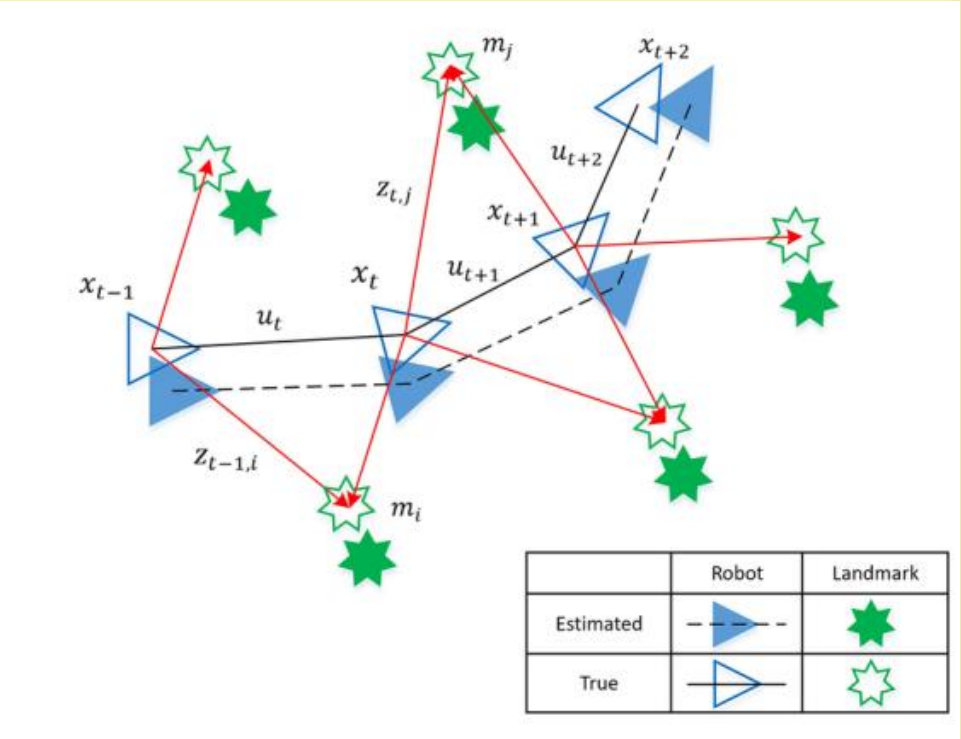

- The advent of depth sensors, such as Microsoft's Kinect and time-of-flight cameras, has propelled the development of depth-based 3D reconstruction techniques. These techniques rely on depth information to create highly accurate 3D models of objects and scenes.
- Depth-based reconstruction is particularly advantageous for applications such as 3D scanning, virtual and augmented reality, and industrial automation, where precise 3D representations are necessary.
- The applications of 3D reconstruction techniques span a wide range of fields, including robotics, augmented reality, medical imaging, and more.
- By employing mathematical models and algorithms to create detailed 3D models of scenes and objects, computer vision systems can analyze and manipulate 3D information with enhanced accuracy and precision.
- This enables advanced applications, such as object recognition, scene understanding, virtual walkthroughs, and surgical planning, which rely on accurate 3D representations of the real world.